ASSEMBLY

2023/07/29

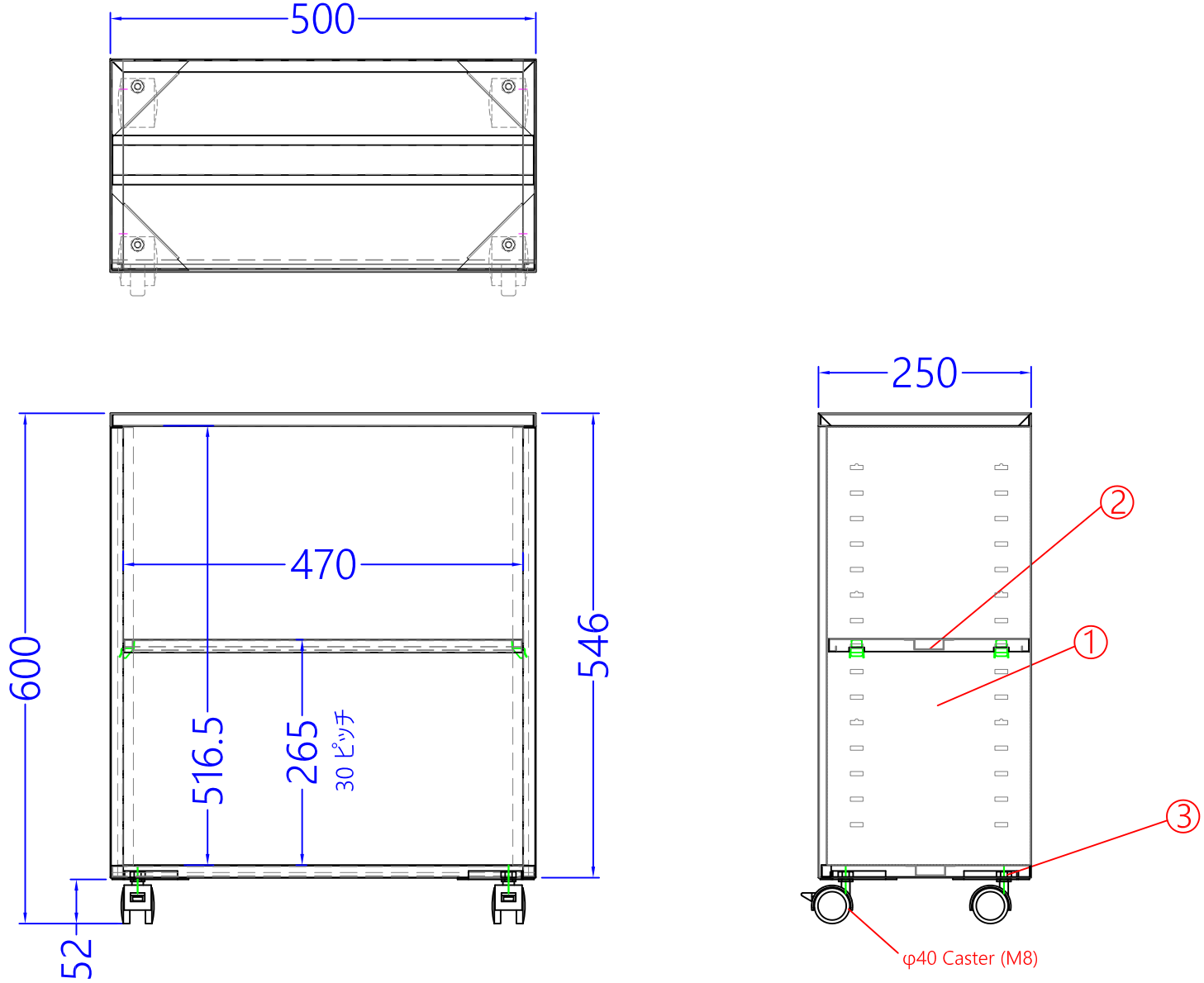

△					Desk Around			Open Wagon OW-2	
△									
△						John Yamagata	John Yamagata		AKIRA CO.,LTD.
△						Drafting	Designing	Check	Drawing Number