ASSEMBLY

2026/02/01

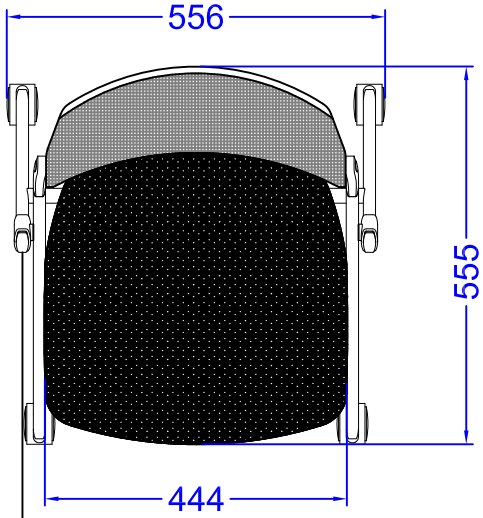

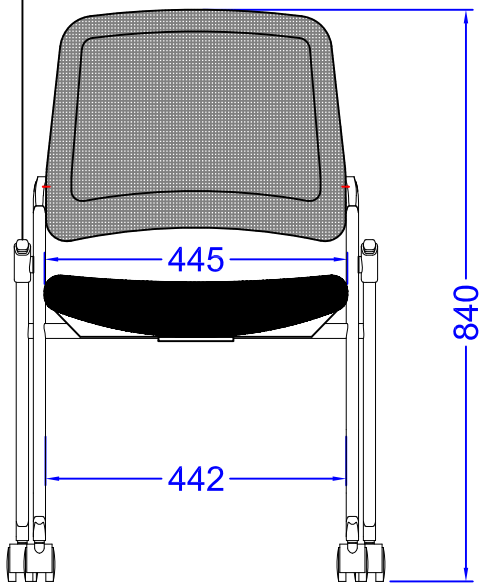

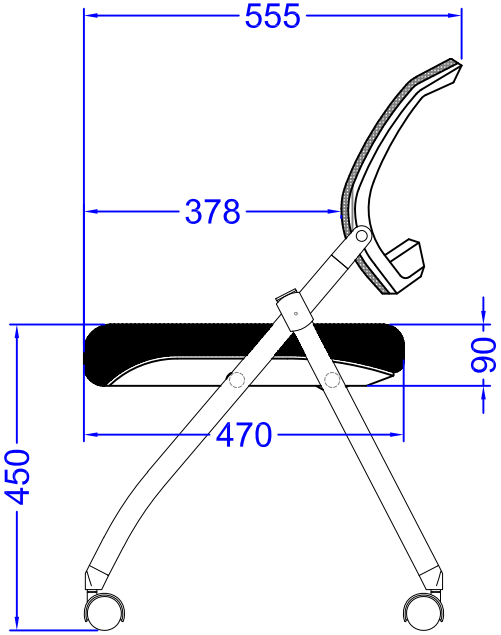

△									
△									
△									
△									

Falding_Chair

TFC

John Yamagata	John Yamagata		AKIRA CO.,LTD.
Drafting	Designing	Check	

Drawing Number

ASSEMBLY

2026/02/01

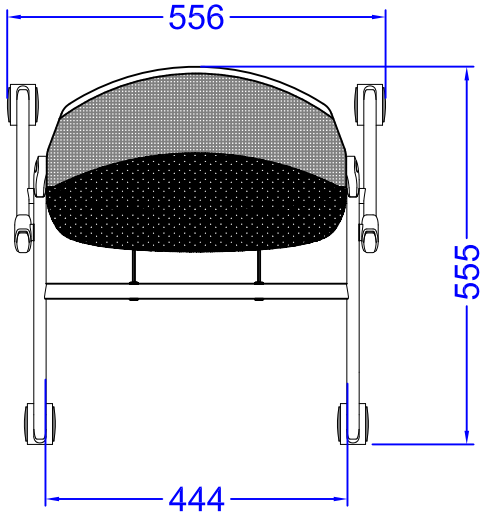

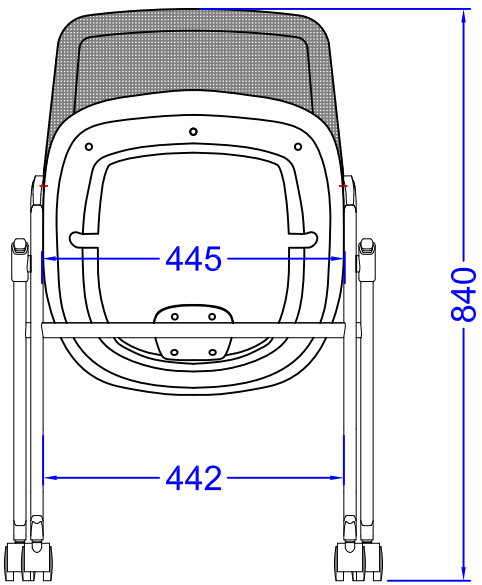

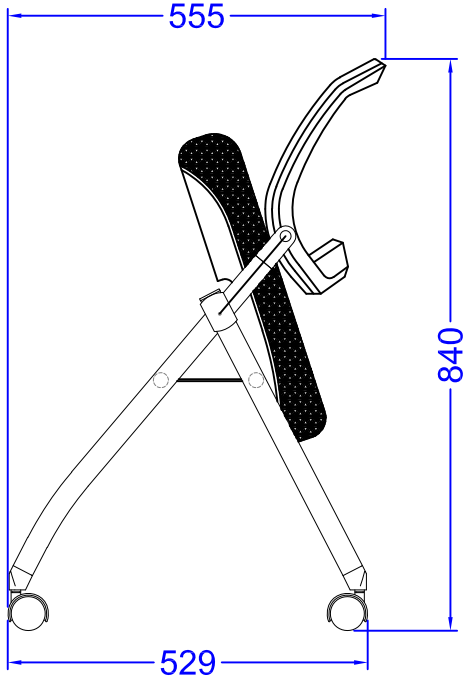

Falding_Chair

TFC

John Yamagata	John Yamagata		AKIRA CO.,LTD.
Drafting	Designing	Check	

Drawing Number

ASSEMBLY

2026/02/01

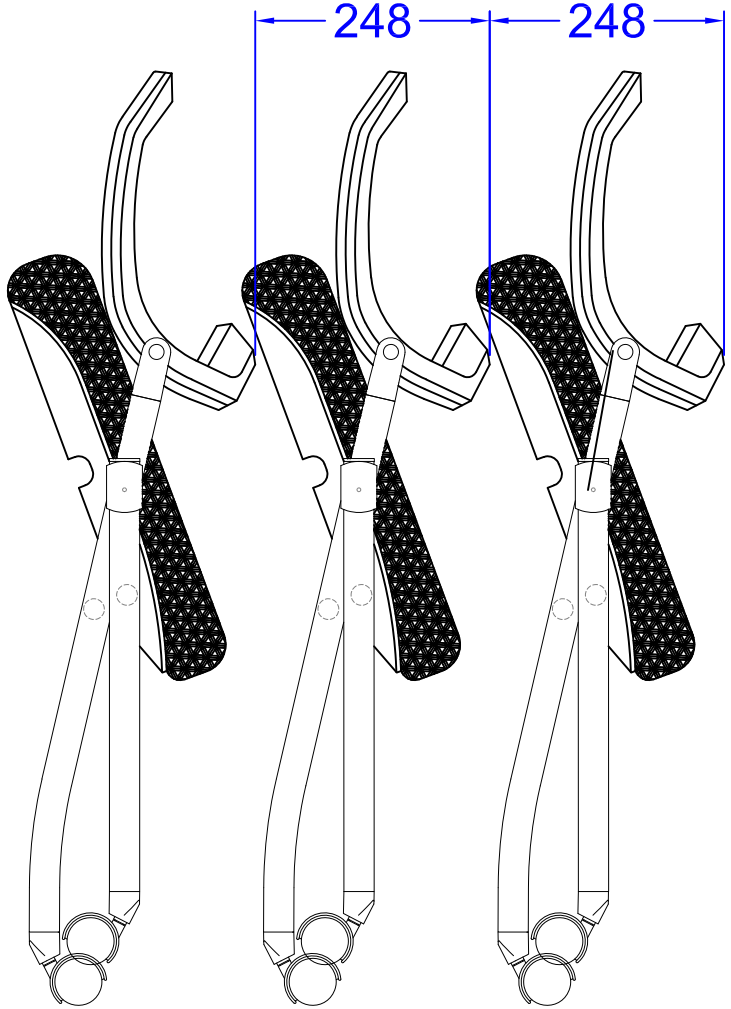

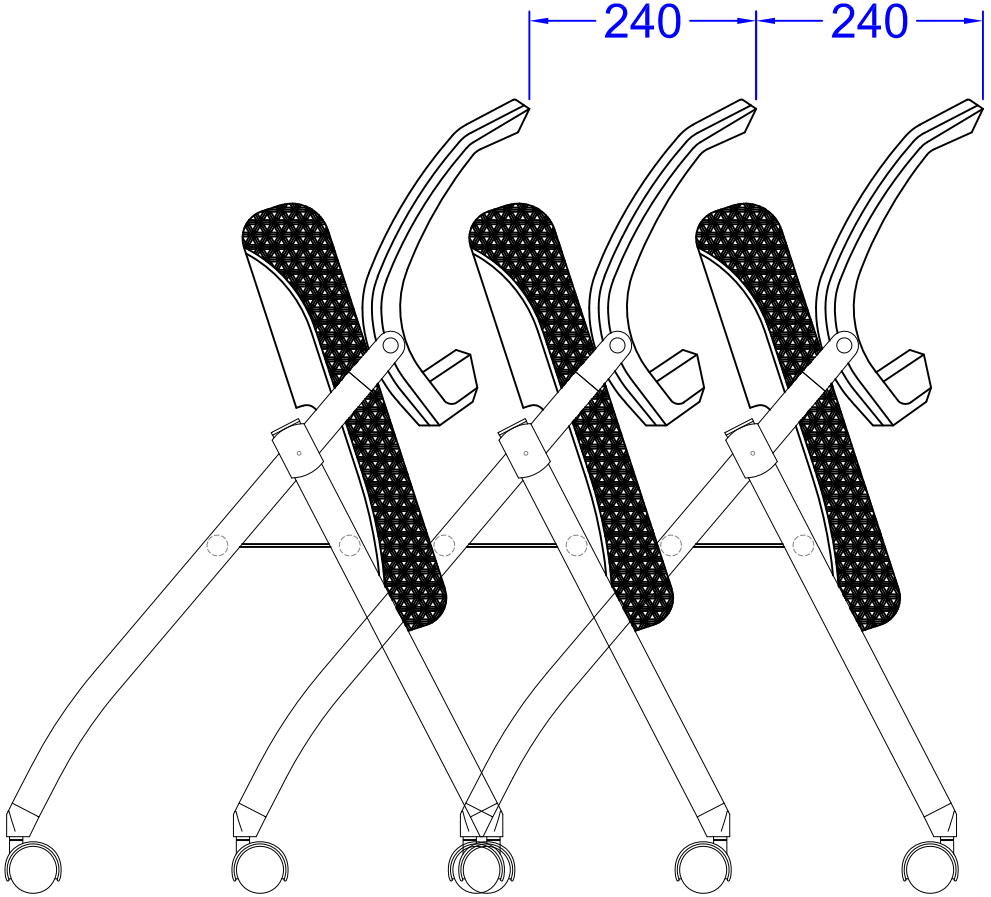

△					Falding_Chair					TFC
△										
△						John Yamagata	John Yamagata		AKIRA CO.,LTD.	Drawing Number
△						Drafting	Designing	Check		