ASSEMBLY

2023/07/29

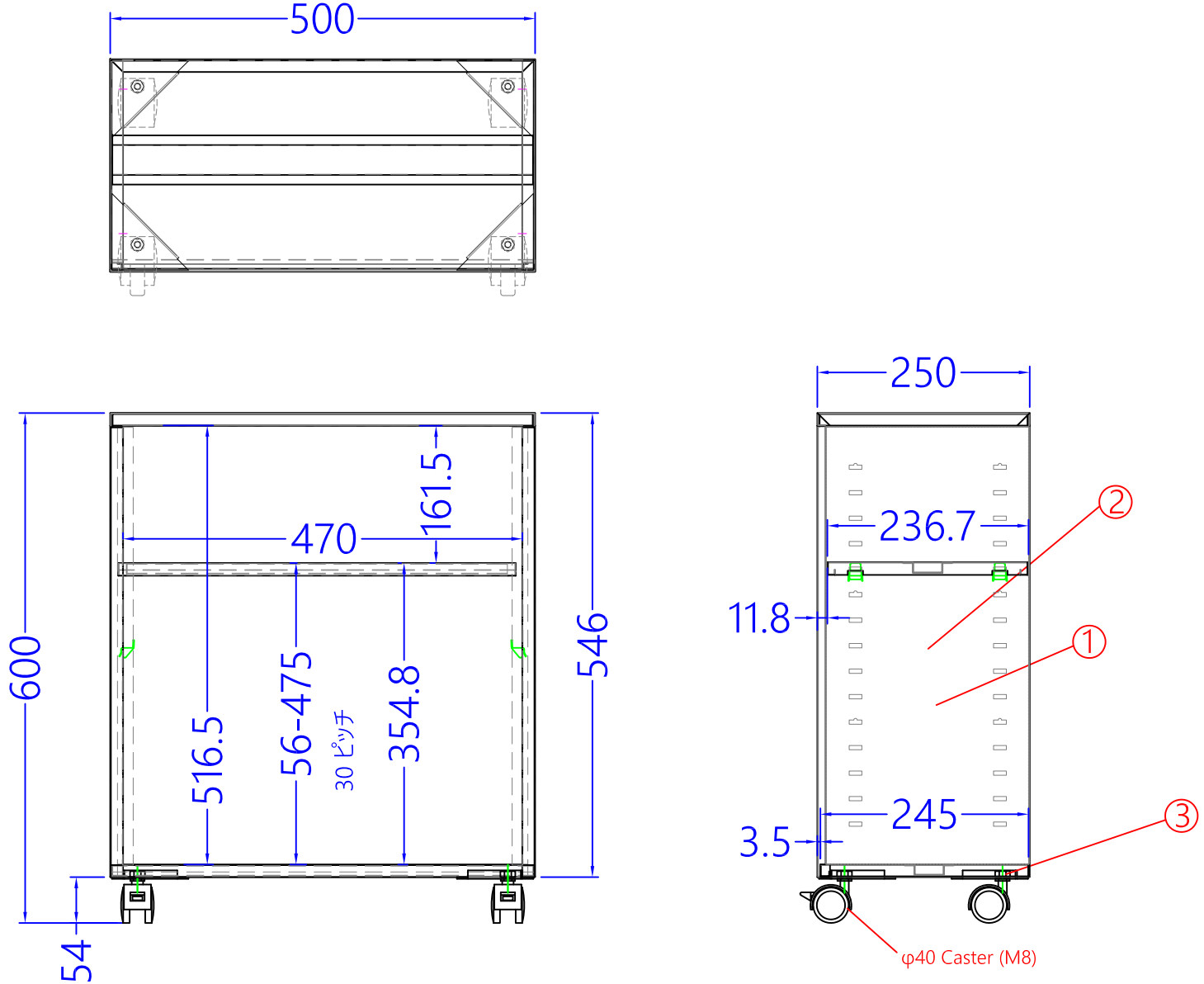

△										
△										
△										
△										

Desk Around

Open Wagon OW-2

John Yamagata	John Yamagata		AKIRA CO.,LTD.
Drafting	Designing	Check	

Drawing Number